NITCHI

END CARRIAGES

No. 2

ISO 9001
ISO 14001
JQA-2734
JQA-EM1902

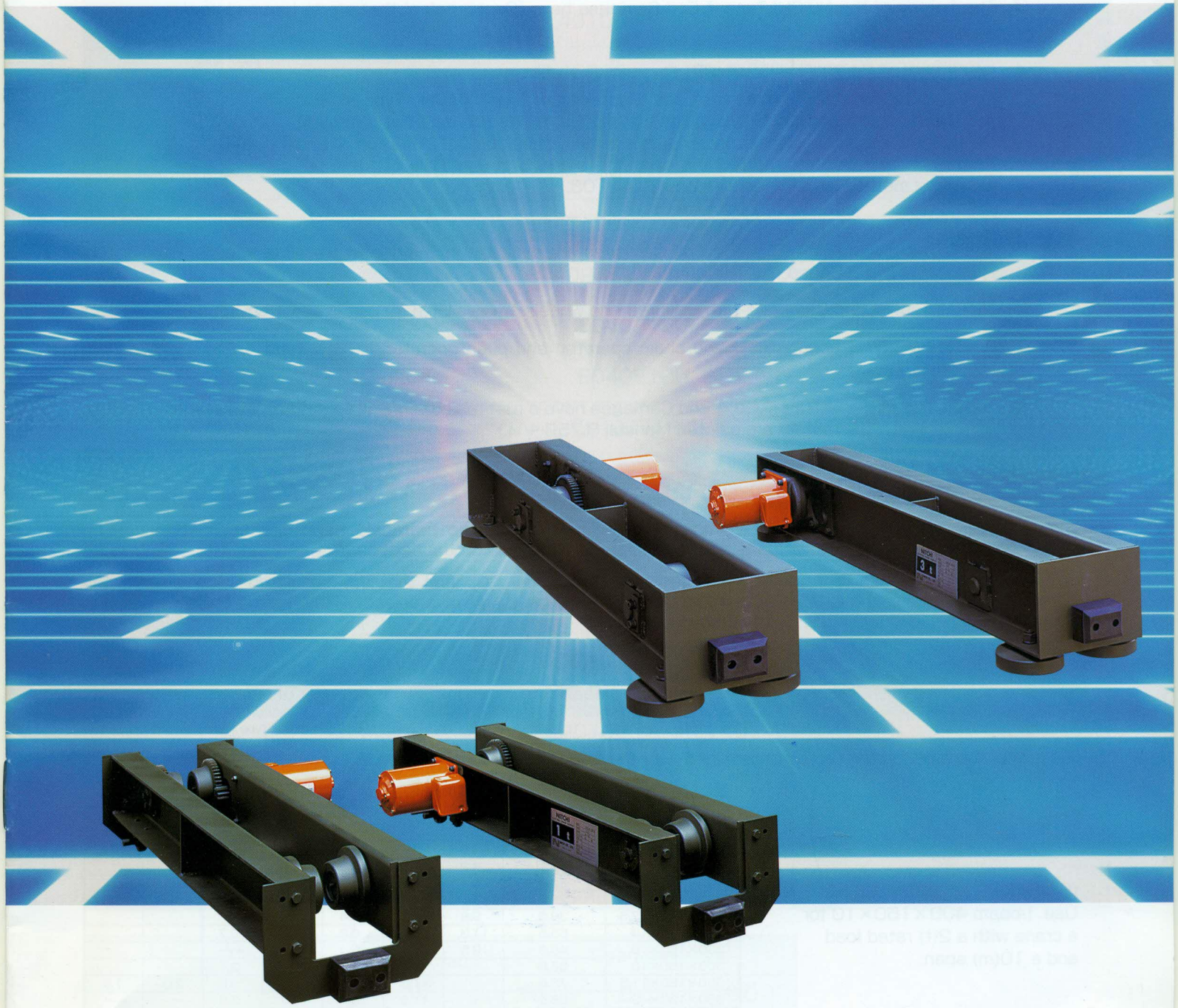

ΑΦΟΙ Α. ΠΑΠΑΔΟΠΟΥΛΟΙ Α.Ε.
ΑΝΤΙΠΡΟΣΩΠΕΙΕΣ - ΕΙΣΑΓΩΓΕΣ
ΜΑΚΡΩΝ ΤΕΙΧΩΝ 27, 185 40 ΠΕΙΡΑΙΑΣ
ΤΗΛ.: 210 41 11824 - 41 16109 - 41 30256
ΤΗΛ.: 210 41 74915 - 6, FAX : 210 41 22448
www.papadopoulos-bros.gr
E-mail:info@papadopoulos-bros.gr

NITCHI CO., LTD.
OSAKA, JAPAN

NITCHI TYPE 4 END CARRIAGES

The NITCHI Type 4 End Carriages make it possible to easily, efficiently and economically manufacture a wide range of industrial type heavy-duty overhead cranes. All NITCHI Type 4 End Carriages are produced at our ultra-modern production facilities while incorporating high quality materials, up-to-the-minute engineering and manufacturing techniques, which are based upon the technology accumulated over our long history as a manufacturer of precision heavy-duty industrial type materials handling equipment.

FEATURES:

1. The ultra-lightweight and durable frames of the NITCHI Type 4 End Carriages are unique designs, and are manufactured with special processes.
2. Each pair of the top running type or the suspension type NITCHI Type 4 End Carriages is made with a symmetrical design for increased stability.
3. The frames of the NITCHI Type 4 End Carriages have "Center-holes" that are to be used as datum points when setting the crane girders.
4. **SECURELY FASTENED WHEELS:**
   The securely fastened wheels of the Suspension Type NITCHI Type 4 End Carriages can be detached to simplify installation. The bolt and nut fastening method will keep the wheels securely in position when the NITCHI Type 4 End Carriages are being transported and when the crane is in use. (The bolt and nut fastening method is not used on Model EL40108.)

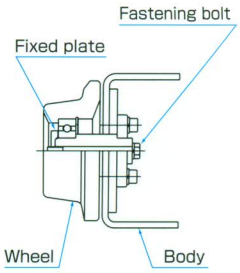

5. The Motor driven NITCHI Type 4 End Carriages are available in 3 different traveling speeds; High-Speed, Half-Speed and 2-Speed.
6. NITCHI Type 4 End Carriages with polyurethane wheels are available for use in silent environments.
7. A wide variety of economical hand chain operated and push operated NITCHI Type 4 End Carriages are available.
8. The bodies of the NITCHI Type 4 End Carriages have a rust-resisting paint coating for increased protection against rust. (The motors are painted Munsell 8.75R 4/14.)

Determining which NITCHI Type 4 End Carriage to use:

1. The most appropriate NITCHI Type 4 End Carriage for your specific materials handlings application can be determined from the models, rated loads and spans listed in the table on the right-page.
2. Use the following formula to determine the maximum wheel load. Confirm that the calculated value is within the maximum wheel load of the NITCHI Type 4 End Carriage to be used. Always select NITCHI Type 4 End Carriage with a maximum wheel load sufficient for the crane:

$$\text{Maximum wheel load (kg)} = \frac{\text{End Carriage weight (kg)} + \text{Girder weight (kg)}}{\text{Number of wheels}} + \frac{\text{Hoist weight (kg)} + \text{Rated load (kg)}}{\text{Number of wheels} \times 1/2}$$

N.B. Top running type end carriages = 4 wheels
Suspension type end carriages = 8 wheels

3. The size of the crane girder can be determined with the following table:

(Example)
Use I-beam 400×150×10 for a crane with a 2(t) rated load and a 10(m) span.

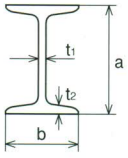

I-Beam Dimensions & Maximum Spans (for Single girder):

I-Beam		Rated load (t)						
a×b×t1	Net weight(kg/m)	0.5	1	2	3	5	8	10
125× 75× 5.5	16.1	3.6						
150× 75× 5.5	17.1	4.2	2.3					
180×100× 6	23.6	6.4	4.0					
200×100× 7	26.0	6.6	4.4	2.3				
250×125× 7.5	38.3	9.8	7.2	4.4	3.0			
250×125×10	55.5	11.3	8.4	6.2	4.4	2.7		
300×150× 8	48.3	12.5	9.4	6.4	4.4	—		
300×150×10	65.5		10.4	7.2	5.1	3.1		
300×150×11.5	76.8		11.3	7.3	5.2	3.2	2.0	1.6
350×150× 9	58.5		11.3	8.1	5.7	3.5	—	—
350×150×12	87.2			10.1	8.5	5.4	3.4	2.8
►► 400×150×10	72.0			10.1	7.4	4.6	2.9	—
400×150×12.5	95.8			11.7	9.6	6.3	4.0	3.2
450×175×11	91.7			12.3	10.3	6.7	4.3	3.5
450×175×13	115.0				11.8	8.4	5.5	4.4
600×190×13	133.0					10.8	7.1	5.8
600×190×16	176.0						9.6	7.9

Values based on 1/800 deflection.

ΑΦΟΙ Α. ΠΑΠΑΔΟΠΟΥΛΟΙ
ΑΝΩΝ. ΤΕΧΝ. & ΕΜΠΟΡΙΚΗ ΕΤΑΙΡΕΙΑ Α.Ε.
ΜΑΚΡΩΝ ΤΕΙΧΩΝ 27 & ΔΡΑΓΑΤΣΑΝΙΟΥ 1
185 40 ΠΕΙΡΑΙΑΣ
ΤΗΛ.: 210 4174915 - 210 4116109
Α.Φ.Μ. 094080947 Δ.Ο.Υ ΦΑΕ ΠΕΙΡΑΙΑ

Product range:

Type		Rated load (t)	Span (m) 5.0	8.5	12.0	15.0	18.0	21.0
Motorized	Top running	1.0	E040108		E040112	E040121		
		2.0	E040208		E040212	E040221		
		3.0	E040312			E040321		
		5.0	E040512			E040521		
		10.0	E041012			E041021		
	Suspension	1.0	EL40108		EL40112	EL40115		
		2.0	EL40208		EL40212	EL40215		
		3.0	EL40308		EL40312	EL40315		
		5.0	EL40512			EL40515		
Motorized (for use in silent environments)	Top running	1.0	E040108U		E040112U	E040121U		
		2.0	E040208U		E040212U	E040221U		
		3.0	E040312U			E040321U		
		5.0	E040512U					
	Suspension	0.5	EL400512U					
		1.0	EL40108U					
Geared	Top running	1.0	G040108		G040112			
		2.0	G040208		G040212			
		3.0	G040312					
		5.0	G040512					
	Suspension	1.0	GL40108		GL40112			
		2.0	GL40208		GL40212			
		3.0	GL40308		GL40312			
		5.0	GL40512					

Type		Rated load (t)	Span (m) 3.0	5.0	9.0
Plain	Suspension	0.5	PL40053	PL40105	
		1.0	PL40105		PL40109

MOTORIZED END CARRIAGES

ΑΦΟΙ Α. ΠΑΠΑΔΟΠΟΥΛΟΙ
ΑΝΩΝ. ΤΕΧΝ. & ΕΜΠΟΡΙΚΗ ΕΤΑΙΡΕΙΑ Α.Ε.
ΜΑΚΡΩΝ ΤΕΙΧΩΝ 27 & ΔΡΑΓΑΤΣΑΝΙΟΥ 1
185 40 ΠΕΙΡΑΙΑΣ
ΤΗΛ.: 210 4174915 - 210 4118109
Α.Φ.Μ 094080947 Δ.Ο.Υ. ΦΑΕ ΠΕΙΡΑΙΑ

Model E04 Top Running Type:

Top running end carriages run upon rails, and are ideal for materials handling applications that need to fully utilize the height of the building.

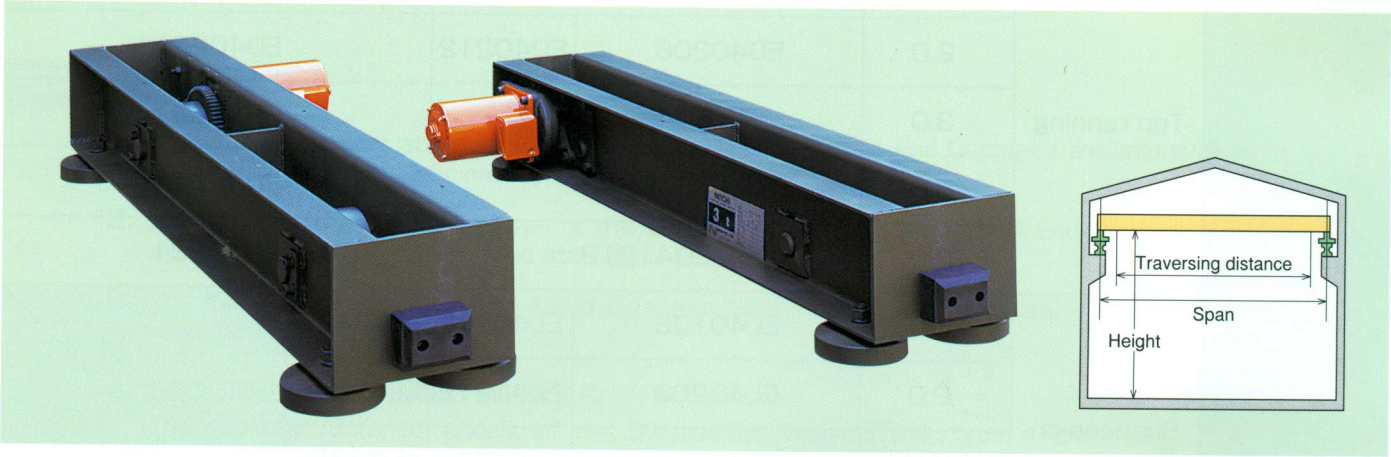

※Alphabet Code of Item Numbers: F = High-Speed, K = Half-Speed & T = 2-Speed.

Rated load (t)	Span (m)	Item No.	Traveling speed 50/60Hz (m/min)	Motor output (kW)	Rail (kg/m)	Maximum wheel load (kg/wheel)	Wheel diameter (mm)	Net weigt (kg)
1	8.5	E040108	20/24	2×0.2	15 (9)	1,450 (1000)	88	2×50
		E040108F	25/30					
		E040108K	10/12					
		EOT40108	20/6.5/24/8	2×0.2/0.07				2×55
	12	E040112	20/24	2×0.2				2×55
		E040112F	25/30	2×0.3				
		E040112K	10/12	2×0.2				
		EOT40112	20/6.5/24/8	2×0.2/0.07				2×60
	21	E040121	20/24	2×0.3		2,000	123	2×120
		E040121F	25/30					
		E040121K	10/12	2×0.2				
2	8.5	E040208	20/24	2×0.3	15	1,450	88	2×60
		E040208F	25/30					
		E040208K	10/12	2×0.2				
	12	E040212	20/24	2×0.3		2,000	123	2×90
		E040212F	25/30					
		E040212K	10/12	2×0.2				
	21	E040221	20/24	2×0.4	22 (15)	3,300 (2600)	158	2×155
		E040221F	25/30					
		E040221K	10/12					
		EOT40221	20/6.5/24/8	2×0.4/0.13				2×160
3	12	E040312	20/24	2×0.4				2×125
		E040312F	25/30					
		E040312K	10/12					
		EOT40312	20/6.5/24/8	2×0.4/0.13				2×130
	21	E040321	20/24	2×0.4	22	3,700	173	2×210
		E040321F	25/30	2×0.75				
		E040321K	10/12	2×0.4				
		EOT40321	20/6.5/24/8	2×0.4/0.13				2×215
5	12	E040512	20/24	2×0.4				2×170
		E040512F	25/30	2×0.75				
		E040512K	10/12	2×0.4				
		EOT40512	20/6.5/24/8	2×0.4/0.13				2×175
	21	E040521	20/24	2×0.4	22 (30)	4,600 (5900)	218	2×255
		E040521F	25/30	2×0.75				
		E040521K	10/12	2×0.4				2×260
		EOT40521	20/6.5/24/8	2×0.4/0.13				2×265
10	12	E041012	20/24	2×0.75	30	8,500	318	2×410
		E041012F	25/30					
		E041012K	10/12	2×0.4				2×415
	21	E041021	20/24	2×0.75				2×500
		E041021F	25/30					
		E041021K	10/12	2×0.4				2×505

N.B. Please contact us when using runway rails.

ΑΦΟΙ Α. ΠΑΠΑΔΟΠΟΥΛΟΙ
ΑΝΩΝ. ΤΕΧΝ. & ΕΜΠΟΡΙΚΗ ΕΤΑΙΡΕΙΑ Α.Ε.
ΜΑΚΡΩΝ ΤΕΙΧΩΝ 27 & ΔΡΑΓΑΤΣΑΝΙΟΥ 1
185 40 ΠΕΙΡΑΙΑΣ
ΤΗΛ.. 210 4174915 - 210 4116109
Α.Φ.Μ 094080947 Δ.Ο.Υ ΦΑΕ ΠΕΙΡΑΙΑ

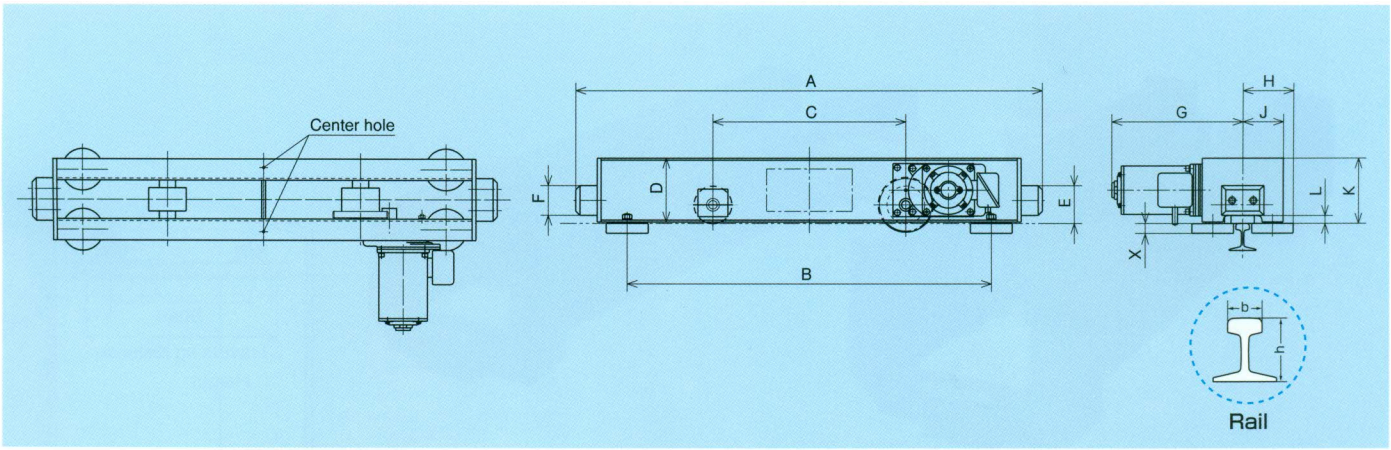

Item No.	Dimensions (mm)											
	A	B	C	D	E	F	G	H	J	K	L	X
E040108	1,090	850	450	150	89	70	310	114.5 (119.5)	95.5	154	18	23
E040108F												
E040108K												
EOT40108							360					
E040112	1,440	1,200	800				310					
E040112F												
E040112K												
EOT40112							360					
E040121	2,340	2,100	1,400	200	97		350			214	14	
E040121F												
E040121K												
E040208	1,090	850	450	150	89		310	114.5	120.5	154	18	
E040208F												
E040208K												
E040212	1,440	1,200	800	200	97		310			214	14	
E040212F												
E040212K												
E040221	2,390	2,100	1,400		114		360	169 (173.5)	135	217	17	
E040221F												
E040221K												
EOT40221							400					
E040312	1,580	1,290	800				360					30
E040312F												
E040312K												
EOT40312							400					
E040321	2,400	2,100	1,400		121.5		365	169	140	220	20	
E040321F												
E040321K												
EOT40321							405					
E040512	1,640	1,340	800				365					
E040512F												
E040512K												
EOT40512							405					
E040521	2,420	2,100	1,400		144		375	185.5 (180.5)	148	240	40	40
E040521F												
E040521K							453					
EOT40521							492					
E041012	2,000	1,663	1,000	300	194		390	210.5	163	348	48	50
E041012F												
E041012K							468					
E041021	2,450	2,100	1,400				390					
E041021F												
E041021K							468					

The design, materials and specifications are subject to change for improvements without notice.